ingqing

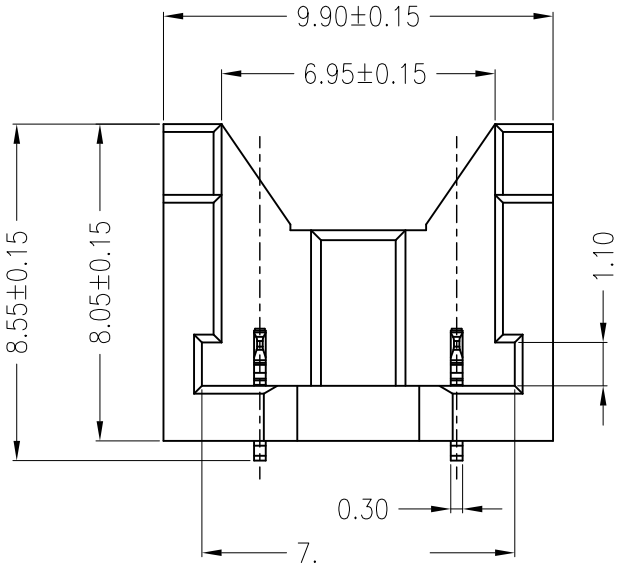

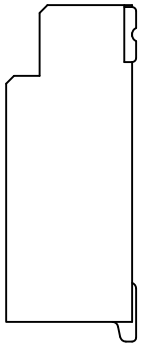

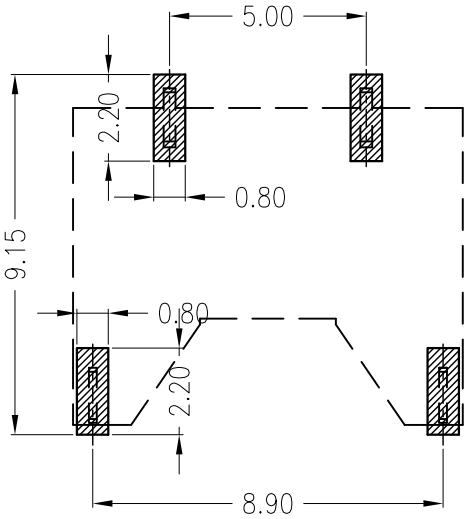

PCB LAYOUT

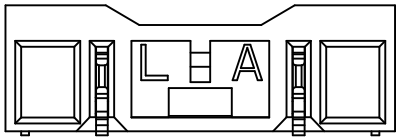

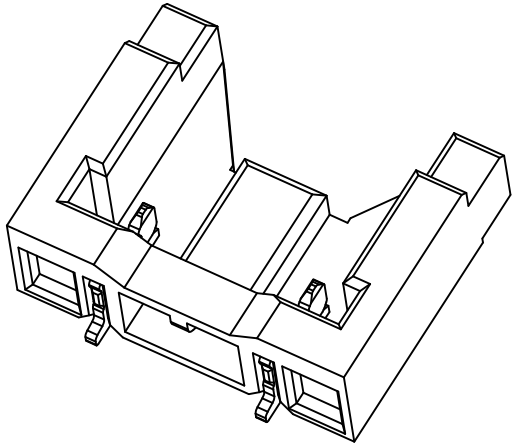

ORDER INFORMATION:

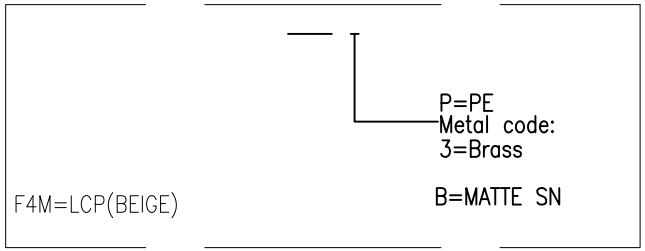

Specifications:

Poles:02
Contact resistance:≤30mΩ
Insulation resistance:≥1000MΩ
Rated voltage:400V AC DC
Rated current:0.75A AC DC
Withstand Voltage: 1800V AC/minute
Temperature Range:−25°C～ +85°C
||

川			TITLE:
		USE:	PART NO.:
X. ±0.50	X. ±5°	APPD:	
X.X ±0.30	X.X		DWG NO.:
X.XX ±0.20		CHKD:	
	UNITS: mm	DR:	SCALE / SHEET